Guliwer electronics

Fuel sensor

# GW 7-2501

## Description

Material – flange PBT; tube - antimagnetic stainless steel

The basic construction component is a plastic flange in which a stainless steel tube is moulded. The measuring system is placed inside the tube. The float with a magnet moves along this tube and operates the magnetic switches. As a result, the output resistance value depends on the fuel level in the tank.

The output signal is provided by means of a two-pole sealed connector moulded in the flange.

The Fuel Sensor is intended for mounting to tanks with a 19/16″ thread.

The use of a fuel gauge must be specified in the order.

## Parameters:

| | | |
|---|---|---|
| Max. voltage | 100 | V |
| Max. current | 50 | mA |
| Operating temperature | -40°C thru +85°C | °C |
| Storage temperature | -40°C thru +85°C | °C |
| Label | producer, producer code, date (or date code), customer identification | |
| Vibration resistance | 3 | g |
| Service life | 1 000 000 | cycles |
| Protection degree | IP 68 (inner part) | IP 67 (external part) |
| Flange thread | 19/16 12UN-2A | |
| Max. tightening torque | 10 | Nm |
| Connector | DELPHI 12084669 (designed for 12162197 housing) | |

## Overview of manufactured types

| Type | height [H] | L1 | L0 | Number of measuring steps | R max | R min |
|---|---|---|---|---|---|---|
| | | | | | [ohm] | |
| | measured from flange [mm] | | | | state 0 | state 1 |
| GW 7-2501 | 262 | 44 | 240 | 14 | 246 | 33 |
| GW 7-2503 | 211 | 49 | 189 | 10 | 233,3 | 33 |
| GW 7-2505 | 295 | 49 | 273 | 16 | 239 | 33 |

Other types can be prepared according to customer requirements within the limit parameters stated below:

## Limit parameters for specifying new types by the customer

| | | |
|---|---|---|
| Max. length H | 600 | mm |
| Measuring circuit resistance | 50 – 100 000 | ohm |
| Minimum measurement step | 10 | mm |
| Max. measured height L1 | 42 | mm |
| Min. measured height L0 | H - 24 | mm |

Guliwer electronics, s.r.o., Dukelskych hrdinu 1011, 563 01 Lanskroun, Czech Republic
Tel.: +420 465 461 537 (sales) +420 465 461 536 (technical information)
Mobil: +420 603 162 962; +420 603 843 695; e-mail: guliwer@guliwer.cz; http://www.guliwer.cz

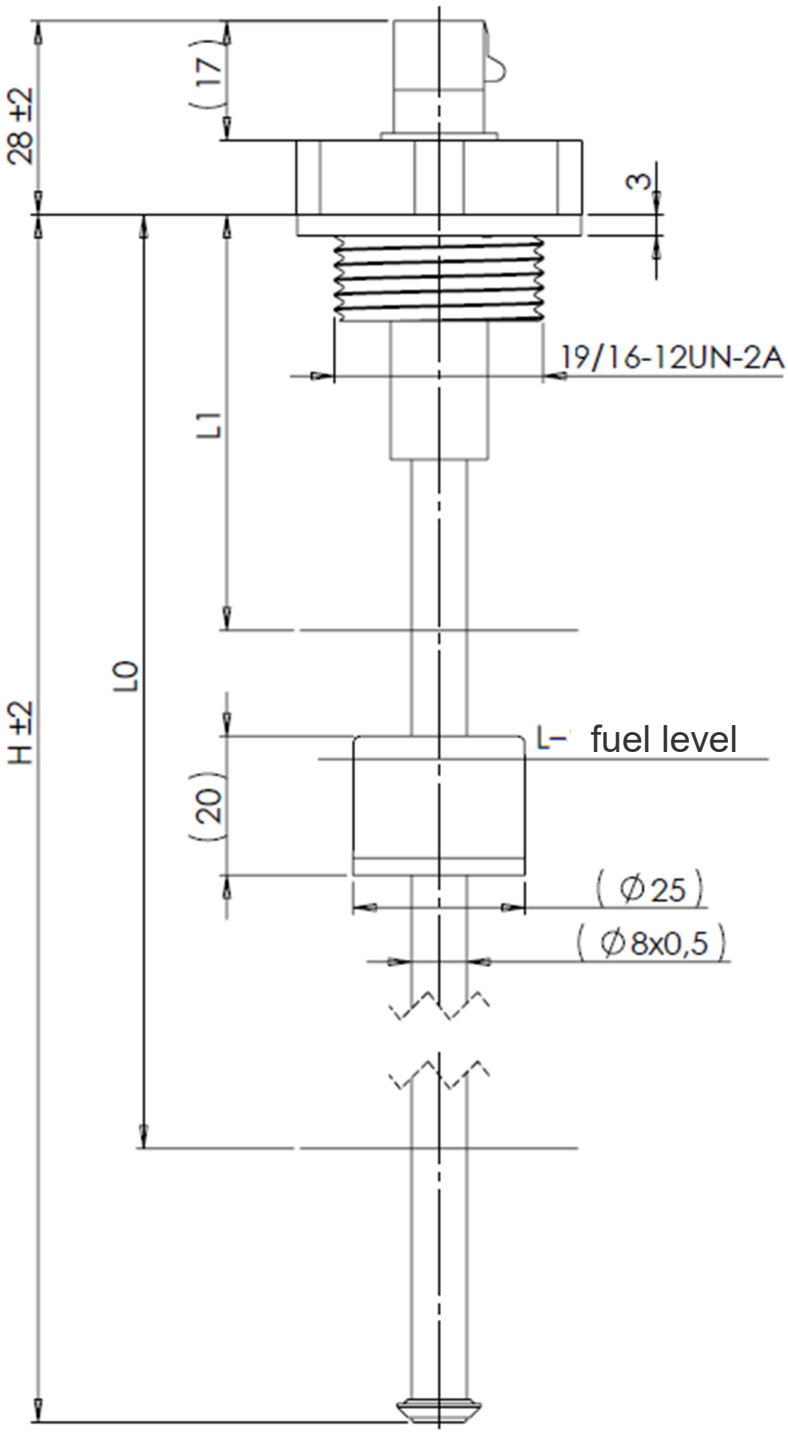


Circuit diagram

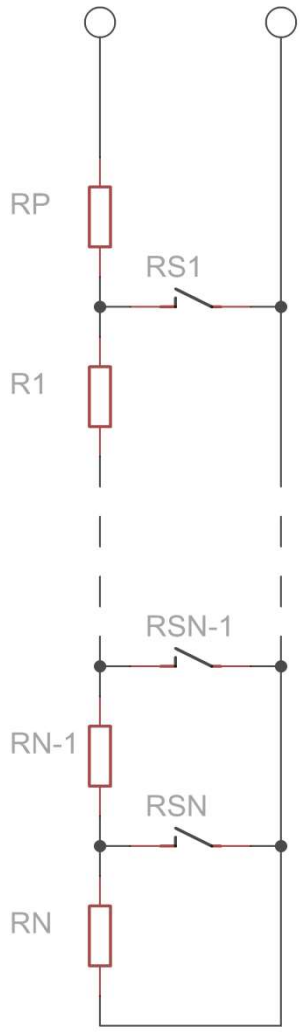


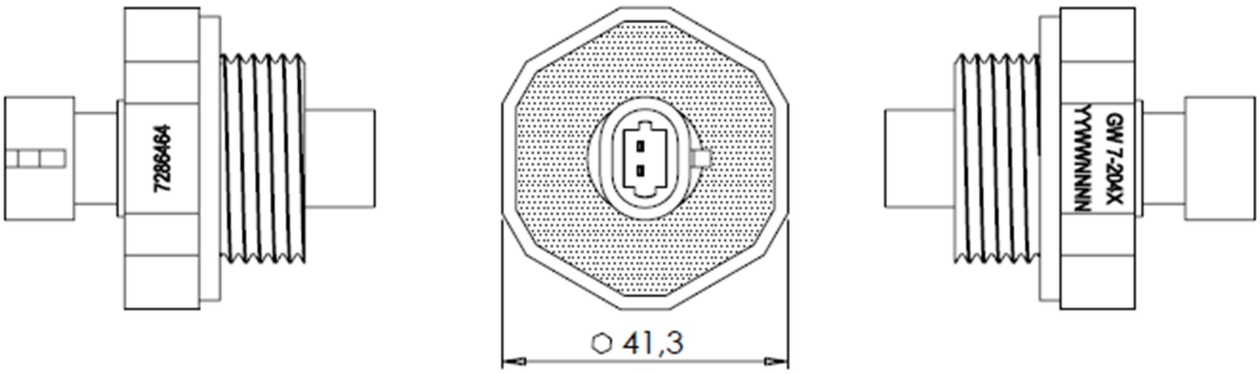


Guliwer electronics, s.r.o., Dukelskych hrdinu 1011, 563 01 Lanskroun, Czech Republic
Tel.: +420 465 461 537 (sales) +420 465 461 536 (technical information)
Mobil: +420 603 162 962; +420 603 843 695; e-mail: guliwer@guliwer.cz; http://www.guliwer.cz